Transfer or duplication of this document as well as the utilization or communication of its contents are prohibited unless explicit authorization is granted. Violations will be liable for compensation. All rights reserved for patent, utility model or designs registrations. 除非经予明确授权，否则禁止转让、复制、利用、交流本文件的内容，侵犯者将负赔偿责任。本公司保留对涉及发明、实用新型和外观专利的所有权利。

未注公差/General tolerances(mm)

0~3	>3~6	>6~10	>10~18	>18~30	>30~50	>50~80	>80~120	>120~180	>180~250	>250~315	>315~400	>400~500	>500	0.1/10
±0.12	±0.18	±0.22	±0.26	±0.31	±0.37	±0.57	±0.80	±0.93	±1.05	±1.15	±1.60	±2.20	±2.50	±2°

DT22MU - SLX / BL

(Series No.)

(Color): BL: (Black)

(Type of actuator): SL2R: selector 2 switch reset(Long handle)
SL2L: selector 2 switch lock(Long handle)
SL3R: selector 3 switch reset(Long handle)
SL3L: selector 3 switch lock(Long handle)

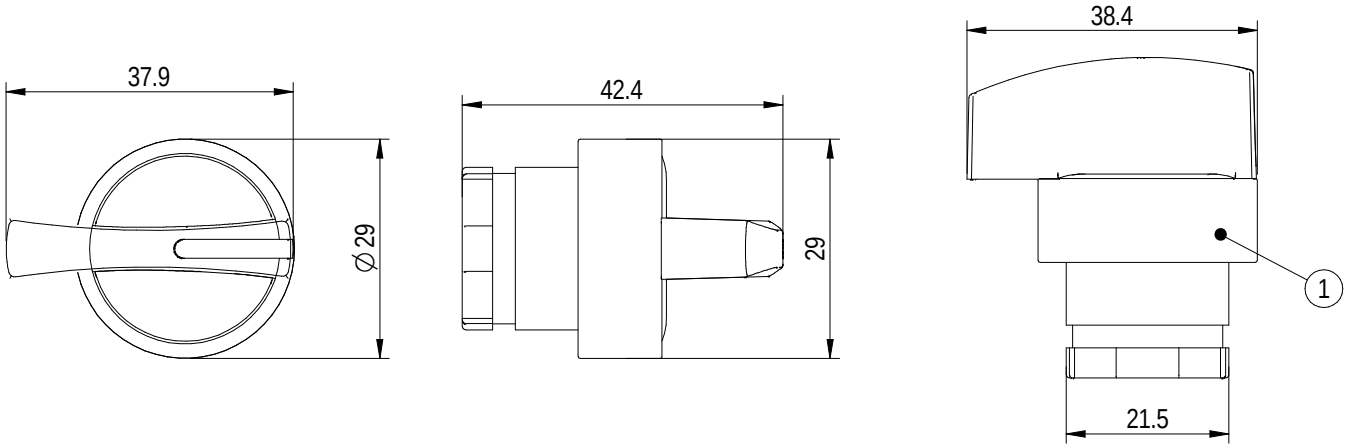

ITEM	NAME OF PART	MATERIAL	NOTES
1	Button head	/	/

使用温度范围/Operating temperature(°C)	-25～+55(无冰冻)
使用湿度范围/Operating humidity(%RH)	45～85
符合RoHS环保要求/Conform to RoHS	Yes
标准颜色编号/Standard color number: PANTONE / RAL	/

DEGSON

APPD:	GZG	2025.08.11
CHKD:	PH	2025.08.11
DRFT:	GXJ	2025.08.11

A4 mm (inch)

MATERIAL:
SURFACE/COLOR:
MAT NO./REV: / 00
MAT STATUS: 样品

NAME: DT22MU-SLX/BL

DRAWING NO.	TYPE	DRAWING STATUS	SCALE	SHEET
200341695	CUSTOMER DRAWING	work	2:1	1/1

REV	ECN	DESCRIPTION	DRFT	DATE
00		New Drawing	GXJ	2025.08.11